BENZ 605 X-beam Forged Connecting Rods Main Sizes

Brand: Hurricane	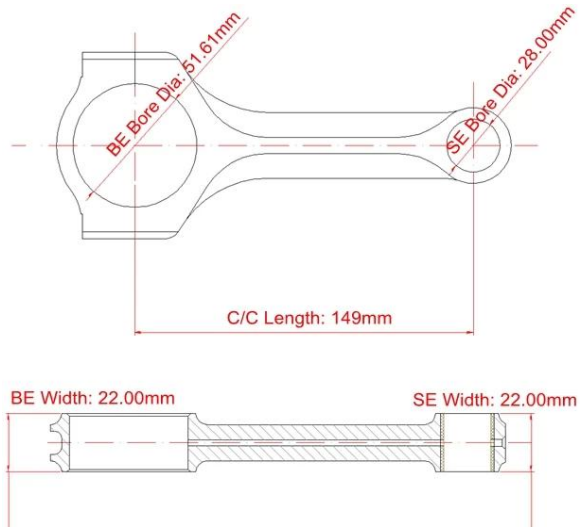
Center to Center Length: 149mm/5.866"	
Big End Bore Diameter: 51.61mm/2.032"	
Big End Width: 22.00mm/0.866"	
Small End Bore Diameter: 28.00mm /1.102"	
Small End Width: 22.00mm/0.866"	
Beam Style: X-beam	

BENZ 605 X-beam Forged Connecting Rods Features

Connecting Rod Bolt Diameter	3/8 "
Approximate Connecting Rod Weight	xxx
Advertised Horsepower Rating	550hp
Quantity	Sold as 4 pieces /set
Material	Forged 4340 steel
Connecting Rod Finish	Shot-peened, Polished
Pin	Bronze wrist pin bushings
Wrist Pin Style	Floating
Cap Retention Style	Cap screw
Weight Matched Set	Yes ,Balanced +/- 1g
Magnafluxed	Yes
Private Label	Yes ,available
Custom design	Yes, accept

These BENZ 605 X-beam conrods forged and engineered from high tensile 4340 steel forgings ; Each forging is X-rayed, sonic tested and magnafluxed; Heat treatment with 34-38HRC ; Built as X-beam for weight saving and high strength ; All surfaces 100% machined by CNC machine for improved strength ; Per rod shot peened to relieve stress fully and honed to meet tight tolerance .

CNC Machine Center

Conrods Inspection Tools

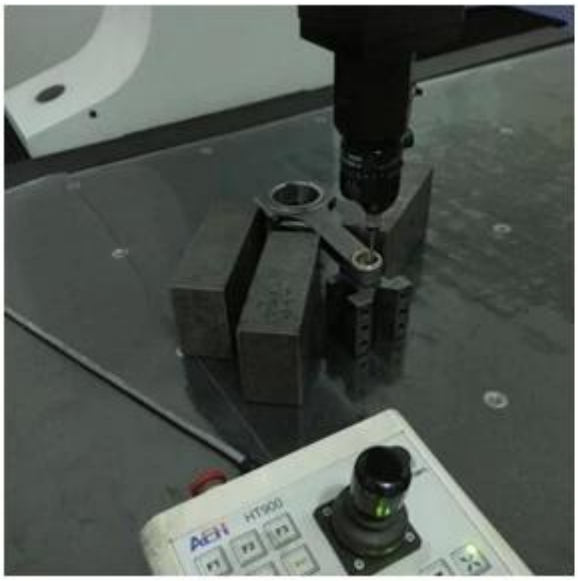

Custom connecting rods and private logo printing service is available , welcome to conatct us if any interest . mail to **marketing@hurricane-rod.com.cn**