VW VR5 I-beam Connecting Rods Main Sizes

Brand: Hurricane	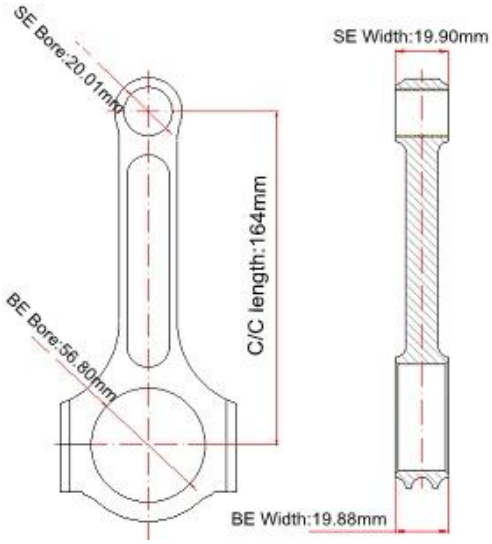
Center to Center Length: 164mm/6.457"	
Big End Bore Diameter: 56.80mm/2.236"	
Big End Width: 19.88mm/0.783"	
Small End Bore Diameter: 20.01mm /0.788"	
Small End Width: 19.90mm/0.783"	
Beam Style: I-beam	

VW VR5 Connecting Rods Features

Connecting Rod Bolt Diameter	5/16 "
Approximate Connecting Rod Weight	xxxg
Advertised Horsepower Rating	1000hp
Quantity	Sold as 5 pieces /set
Material	*Forged 4340 steel*
Connecting Rod Finish	Shot-peened, Polished
Pin	Bronze wrist pin bushings
Wrist Pin Style	Floating
Cap Retention Style	Cap screw
Weight Matched Set	Yes ,Balanced +/- 1g
Magnafluxed	Yes
Private Label	Yes ,available
Custom design	Yes, accept

VW VR5 Connecting Rods Description

Hurricane Speed and Performace is proud to make the highest quality connecting rods available for VW&Audi applications, at a reasonable price. This is accomplished through careful design with professional designers who have experience over 20years, machining, and strict quality control processes. With many

of sets of **VW and Audi connecting rods** export to all over the world. We will become your best choice on performance rods supplier.

Rods Features
Forgings from 4340 Chrome Moly Steel
Heat Treatment for maximum strength, dimensional stability, and fatigue life.
Fully Machined and Shot Peened
I-beam Design
Tolerances as tight as +0.005
Use standard ARP2000 Rod or L19 Bolts
Magnaflux Inspected
Dimensionally Inspected
Packed in balanced sets within 2g
All this at a price point that yields market leading value
Combination tested to over 1000HP+

Rifle Drilling if necessary
All of our Forged 4340 steel rods are available in a rifle drilled option. Rifle drilling will put a small pathway through the center of the rod from the bearing to the wrist pin. This pathway allows pressurized oil from the rod bearing to feed extra oil to the wrist pin itself, causing less wear and friction between the rod and piston and increasing the life of the internals. We highly recommend this option in high horsepower and increased rev applications.
More features about Hurricane rods, please kindly explore here:
1. Hurricane Connecting Rods Features - 1
2. Hurricane Connecting Rods Features - 2