Toyota 1NZ Connecting Rods Main Sizes

Brand: Hurricane	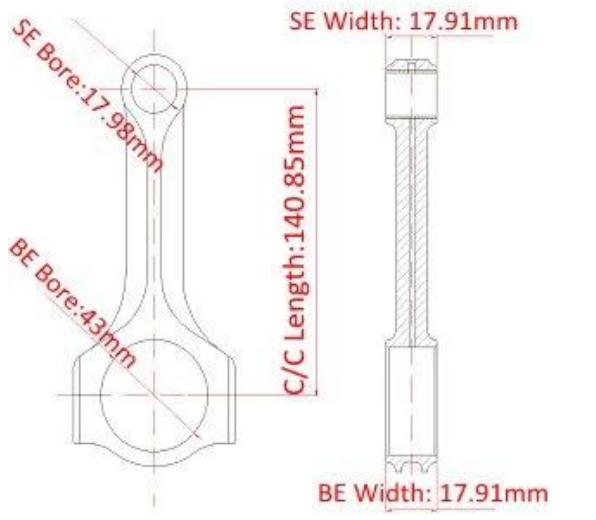
Center to Center Length: 140.85mm/5.545"	
Big End Bore Diameter: 43mm/1.693"	
Big End Width: 17.91mm/0.705"	
Small End Bore Diameter: 17.98mm /0.708"	
Small End Width: 17.91mm/0.705"	
Beam Style: X-beam	

Toyota 1NZ FE Connecting Rod Set Engine Features

Connecting Rod Bolt Diameter	3/8 "
Approximate Connecting Rod Weight	XXXg
Advertised Horsepower Rating	700hp
Quantity	Sold as 4 pieces /set
Material	Forged 4340 steel
Connecting Rod Finish	Shot-peened, Polished
Pin	Bronze wrist pin bushings
Wrist Pin Style	Floating
Cap Retention Style	Cap screw
Weight Matched Set	Yes ,Balanced +/- 1g
Magnafluxed	Yes
Private Label	Yes ,available
Custom design	Yes, accept

Toyota X beam Connecting Rods For 1NZ Engine Description

Toyota X beam connecting rods for 1NZ engine is designed for lightness and strength. Because the rod is made by CNC machine completely, it can design in the form with no futile, and can manufacture in suitable weight which does not need balancing each rods.

Forged Connecting Rods for Toyota Lexus Yaris Echo Vios Scion XB 1NZFE 1.5L are made from forged 4340 chrome moly steel, heat treated to increase tensile strength and are shot peened to increase fatigue life. Toyota 1.5L VVT-I 1NZ 1NZ-FXE 1NZ-FE Connecting Rods have a wear resistant bronze bushing for long wrist pin life and feature Hurricane 3/8 fasteners.

Toyota 1NZ FE Connecting Rod Set Application

Engine	Vehicle Model
1NZ-FXE	Toyota Prius (XW10 & XW20) Toyota Prius c/Toyota Aqua Toyota Yaris Toyota Corolla (Axio/Fielder) Toyota Sienta (2nd generation)
1NZ-FXP	Toyota JPN Taxi (AP10)
1NZ-FE	Toyota Vios/Belta Toyota Yaris/Echo Scion xA/Toyota ist Scion xB (1st generation)/Toyota bB (1st generation) Toyota Raum Toyota Porte Toyota Platz Toyota Auris Toyota Fun Cargo Toyota Premio Toyota Allion Toyota Corolla (Axio/Fielder, RunX, Allex) Toyota Sienta WiLL VS Toyota Probox Toyota Ractis Geely CK (Produced under license) Geely MK (Produced under license) Great Wall C10
1NZ-FTE	Toyota Vios Turbo (Thailand) Toyota Vitz RS Turbo (Japan) Toyota Corolla Axio GT (Japan)

If you did not find the Toyota connecting rods you need, please contact us for assistance.

Toyota 1NZ-FXP Engine

Note: Picture from Wikipedia.