Toyota 22RE X-beam Connecting Rods Main Sizes

Brand: Hurricane	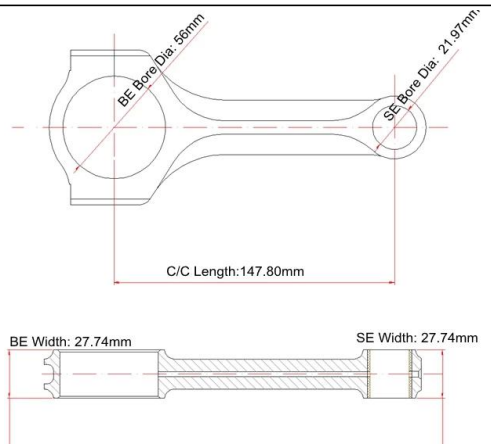
Center to Center Length: 147.80mm/5.820"	
Big End Bore Diameter: 56mm/2.205"	
Big End Width: 27.74mm/1.092"	
Small End Bore Diameter: 21.97mm /0.865"	
Small End Width: 27.74mm/1.092"	
Beam Style: X-beam	

Toyota 22RE X-beam Connecting Rods Features

Connecting Rod Bolt Diameter	3/8"
Approximate Connecting Rod Weight	XXX
Advertised Horsepower Rating	700hp
Quantity	Sold as 4 pieces /set
Material	Forged 4340 steel
Connecting Rod Finish	Shot-peened, Polished
Pin	Bronze wrist pin bushings
Wrist Pin Style	Floating
Cap Retention Style	Cap screw
Weight Matched Set	Yes ,Balanced +/- 1g
Magnafluxed	Yes
Private Label	Yes ,available
Custom design	Yes, accept

Products Description :

1. Made from premium 4340 Chrome Moly Steel
2. Designed for high horsepower engines
3. Fully finished and processed by CNC machine
4. 2-Piece forging for greater strength
5. Packaged in balanced per set: end to end +/- 1 gram
6. Heat treated to HRC 34-38
7. Shot Peened for improved fatigue life
8. All forging are X-rayed, sonic tested and magnafluxed

9. Come with high quality bronzed bushing and dowels

10. All big and small ends are finished with SUNNEN honing machine

Toyota 22RE Finished X-beam Connecting Rods Picture

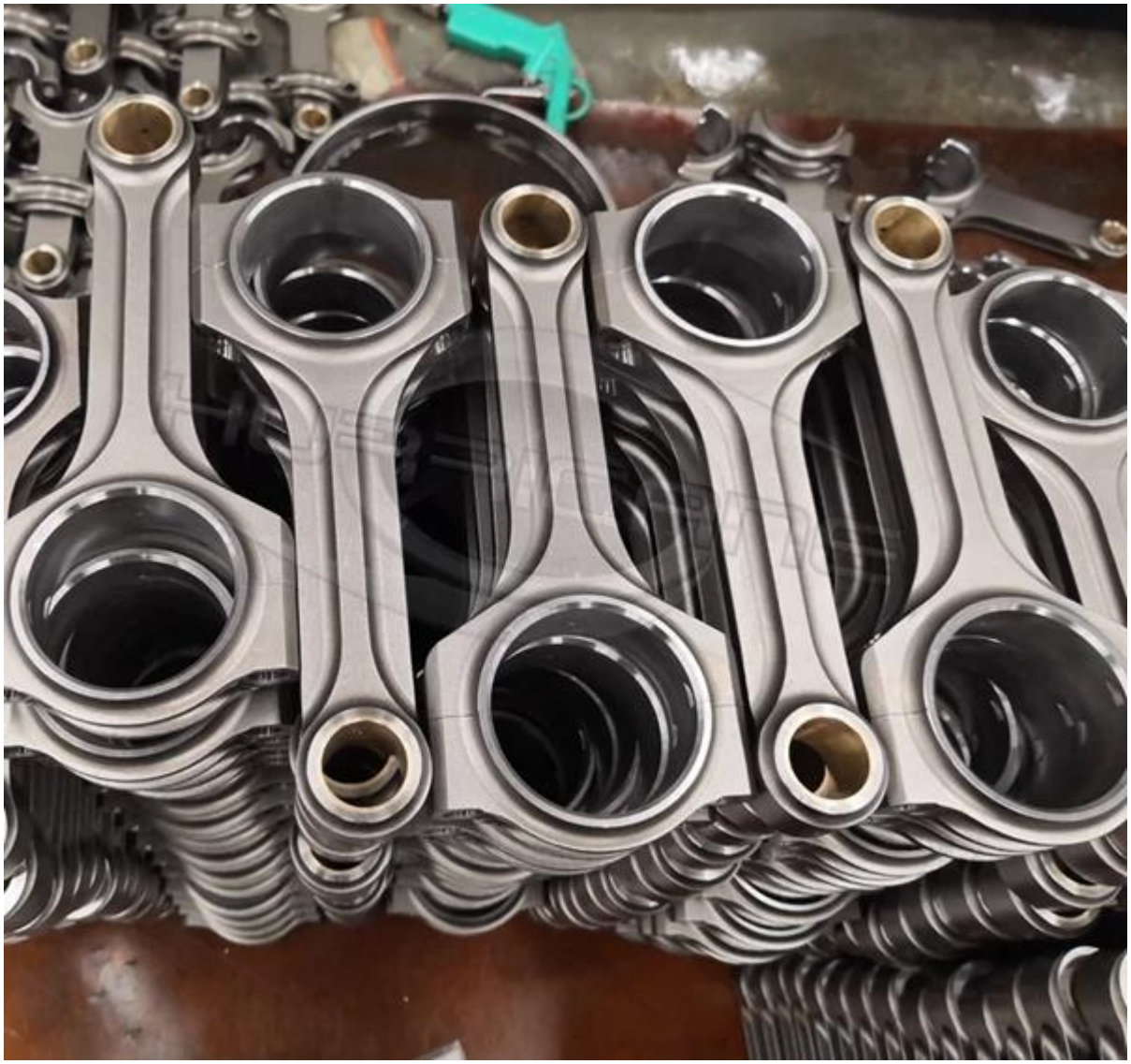

Hurricane Connecting Rods Bolts Picture

So far , Hurricane customers
spread in more than 25 countries , include America, Canada , Australia ,Germany, France, Italy , UK , Sweden ,Polan , Greece, Ireland ,Norway, Spain, Malaysia ,Thailand....

If you can not find the connecting rod which you need on our website , please feel free send email to **marketing@hurricane-rod.com.cn** or leave massage for us online .