GT-R VR38 Forged Conrods Main Sizes

Brand: Hurricane*	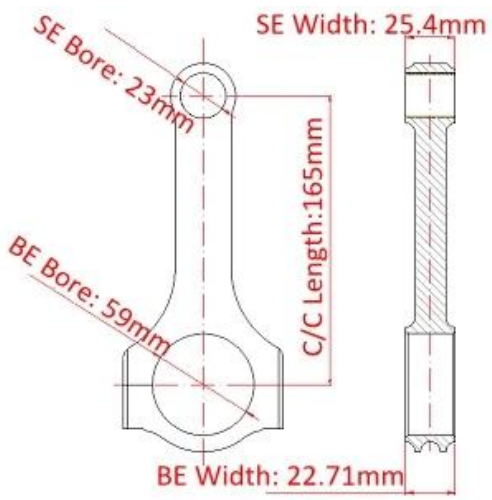
Center to Center Length: 165mm/6.496"	
Big End Bore Diameter: 59mm/2.323"	
Big End Width: 22.71mm/0.894"	
Small End Bore Diameter: 23mm/0.906"	
Small End Width: 25.4mm/1.000"	
Beam Style: H-beam	

H beam VR38DETT Connecting Rods Features

Connecting Rod Bolt Diameter	3/8 "
Approximate Connecting Rod Weight	xxx
Advertised Horsepower Rating	900HP
Quantity	Sold at 6 pieces per set
Material	Forged 4340 steel
Connecting Rod Finish	Shot-peened, Polished
Pin	Bronze wrist pin bushings
Wrist Pin Style	Floating
Cap Retention Style	Cap screw
Weight Matched Set	Yes, Balanced +/- 1g
Magnafluxed	Yes
Private Label	Yes, available
Custom design	Yes, accept

Nissan VR38-GTR 6.496" Connecting Rods Details

When engine output is increased, the demands placed on the connecting rod increase as well. To ensure engine reliability in all conditions, original connecting rods should be replaced with heavy duty specification parts. Nissan VR38-GTR 6.496" connecting rods are manufactured from high strength 4340 (EN24) steel and machined to precise tolerances. Detailed machined work to maintain optimum weight and strength. All GT-R VR38 forged conrods are fully machined, heat treated, stress relieved, properly shot peened, and will be checked by 3/8" ARP 2000 bolts.

Set of six matched rods Nissan VR38DETT fits for all 2009+ Nissan R35 GT-R cars.

Forged Steel Connecting Rods for Nissan GTR R35 VR38 Additional Features

- Stress Relieved
- Rated to 900HP
- One-Piece forging for great strength
- Multi Stage Heat Treatment for maximum strength, dimensional stability, and fatigue life.
- Center to center is maintained under .002″ tolerance
- Hurricane 3/8 1.6 inch rod bolts included
- Silicone bronze bushed for floating pins

Hurricane 4340 steel connecting rods factory also offer X beam and I beam designs for Nissan GT-R R35 VR38DETT engines.

1. *Forged 4340 165mm X beam Connecting Rods for Nissan GT-R R35 VR38DETT*
2. *Nissan 3.8L R35 GTR VR38 DETT Heavy Duty I-Beam Connecting Rods*

Hurricane sales team are always willing to hear from you, please feel free to *contact us.*

2014 Nissan GT-R R35 Car

Note: Picture from RightDrive.