Honda F20B Rods Main Sizes

Brand: Hurricane	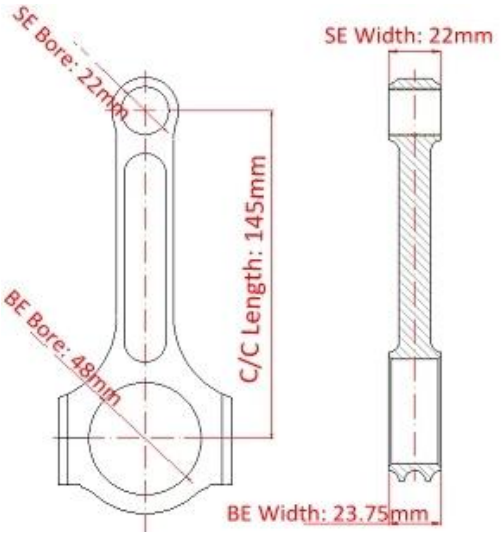
Center to Center Length: 145mm/5.709"	
Big End Bore Diameter: 48.00mm/1.890"	
Big End Width: 23.75mm/0.935"	
Small End Bore Diameter: 22.00mm /0.866"	
Small End Width: 22.00mm /0.866"	
Beam Style: I-beam	

Forged Honda F20B 5.709 Conrod Features

Connecting Rod Bolt Diameter	3/8"
Approximate Connecting Rod Weight	~
Advertised Horsepower Rating	750hp
Quantity	Sold as 4 pieces /set
Material	*Forged 4340 steel*
Connecting Rod Finish	Shot-peened, Polished
Pin	Bronze wrist pin bushings
Wrist Pin Style	Floating
Cap Retention Style	Cap screw
Weight Matched Set	Yes ,Balanced +/- 1g
Magnafluxed	Yes
Private Label	Yes ,available
Custom design	Yes, accept

F20B I beam Rod Set Descripition

Hurricane Honda F20B I beam connecting rods are manufactured using the highest quality one piece 4340 forged steel forgings and have been designed to high horsepower applications. Our Forged Honda F20B 5.709 Conrod will be checked by ARP rod bolts and installed with silicone bronze wrist pin bushes to ensure reliability. These connecting rods are capable of 185 horsepower per rod. Hurricane factory can offer various Honda F-series conrods, like F20C, F22, F22C and F23.

Hurricane also could offer various kinds of beam design, just show some of our I beam design picture at below, for more info, please check: *Hurricane Connecting Rod Features - Various Beam Designs*

All of our hurricane connecting rods could laser-etched “Hurricane” logo or customer logo for authenticity, if you need any futher info, welcome to *contact hurricane team*..

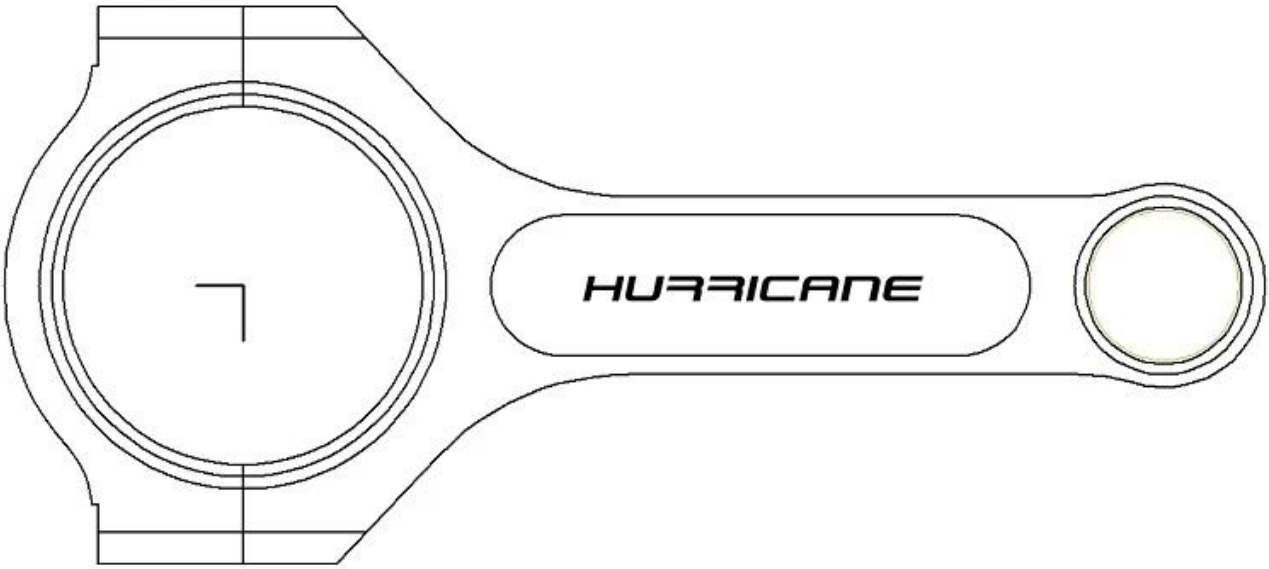

1995 Honda Accord F20B Engine Picture

Note: picture from Youtube