Chevy Small Block V8 Connecting Rods Main Sizes

Brand: Hurricane	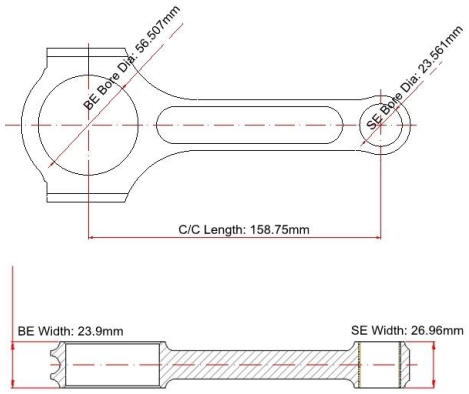
Center to Center Length: 158.75mm/6.250"	
Big End Bore Diameter: 56.507mm/2.225"	
Big End Width: 23.9mm/0.941"	
Small End Bore Diameter: 23.561mm /0.927"	
Small End Width: 26.96mm/1.061"	
Beam Style: I-beam	

Chevy Small Block V8 Connecting Rods Features

Connecting Rod Bolt Diameter	7/16 "
Approximate Connecting Rod Weight	xxx
Advertised Horsepower Rating	1000+ hp
Quantity	Sold as 8 pieces /set
Material	Forged 4340 steel
Connecting Rod Finish	Shot-peened, Polished
Pin	Bronze wrist pin bushings
Wrist Pin Style	Floating
Cap Retention Style	Cap screw
Weight Matched Set	Yes ,Balanced +/- 1g
Magnafluxed	Yes
Private Label	Yes ,available
Custom design	Yes, accept

These 6.250" made for high performance Chevy Small Block V8 applications , forged from **high tensile 4340 steel** material , heat treated to HRC 34-38 and then shot peened for a higher fatigue strength, per rod 100% finished by advanced CNC machine for optimum reliability, they can hold over 1000hp per cylinder , and all big and small ends are finished with SUNNEN honing machine to achieve tighter tolerance to meet high quality standard .

More importantly , at the same price, you will find that our connecting rods are very different from some of other suppliers , through some small details, you can see every small part of our rods are well processed and finished , the visual effect is better . Some pictures for reference as below :

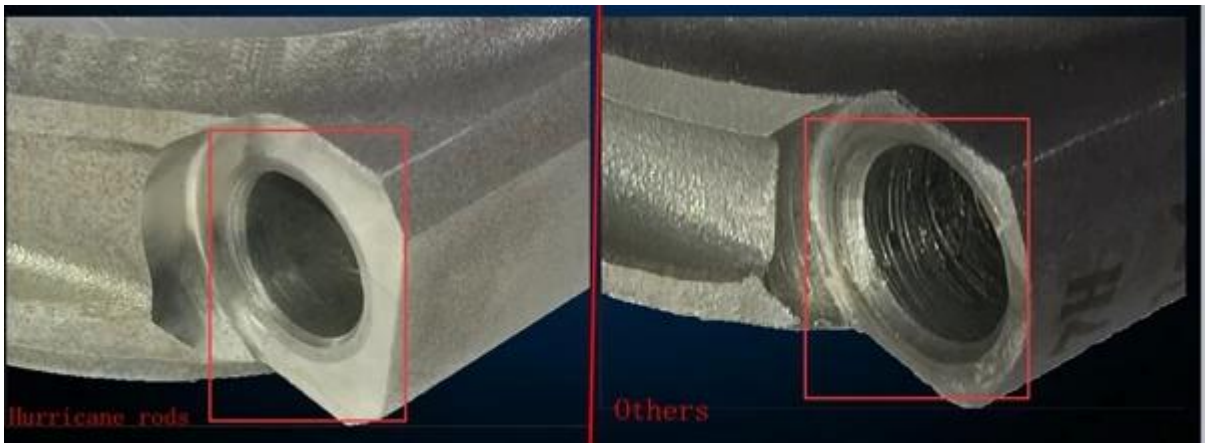

If you have any further question for Hurricane connecting rods, please feel free to **contact our sales team** .

Hurricane also accept custom connecting rods order , if you have any interested in it , please send detailed drawing or dimensions or used sample to us .