Peugeot 106 Connecting Rods Main Sizes

Brand: Hurricane	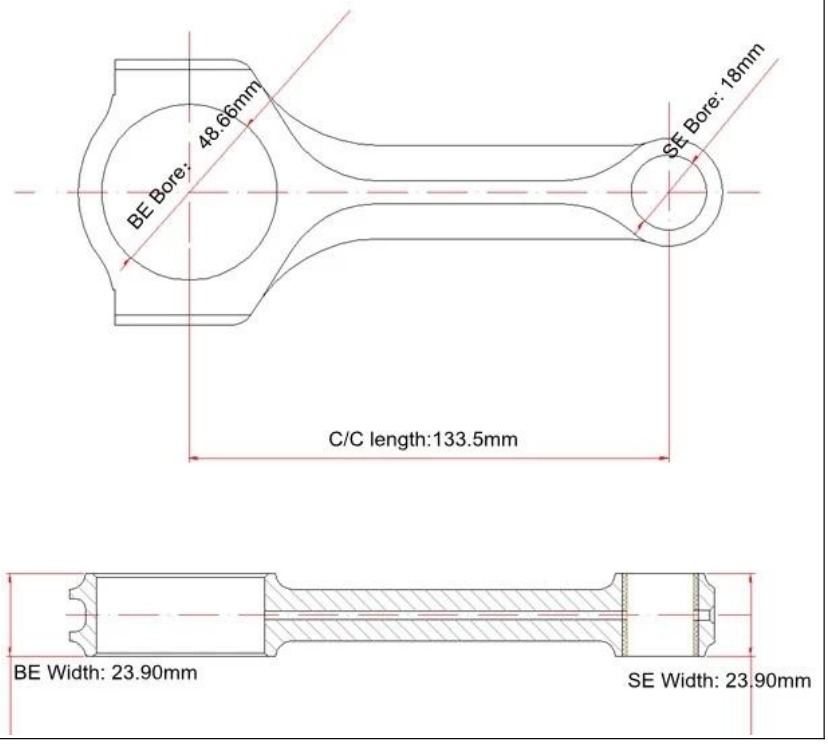
Center to Center Length: 133.5mm/5.256"	
Big End Bore Diameter: 48.66mm/1.916"	
Big End Width: 23.90mm/0.941"	
Small End Bore Diameter: 18mm /0.709"	
Small End Width: 23.90mm/0.941"	
Beam Style: X-beam	

Peugeot 106 Connecting Rods Features

Connecting Rod Bolt Diameter	3/8 "
Approximate Connecting Rod Weight	xxx
Advertised Horsepower Rating	750hp
Quantity	Sold as 4 pieces /set
Material	Forged 4340 steel
Connecting Rod Finish	Shot-peened, Polished
Pin	Bronze wrist pin bushings
Wrist Pin Style	Floating
Cap Retention Style	Cap screw
Weight Matched Set	Yes ,Balanced +/- 1g
Magnafluxed	Yes
Private Label	Yes ,available
Custom design	Yes, accept

Peugeot 106 Connecting Rods Description

The peugeot 106 connecting rods engineered from high tensile 4340 steel forgings, built for high performance Peugeot 106 GTI S16 race engines . Each rod finished with polishing and shot peen process for improved fatigue life . All connecting rods honed well with strict tolerances too meet high quality standard before packaging. Each rod designed and calculated by 3d software too before production to guarantee strength .

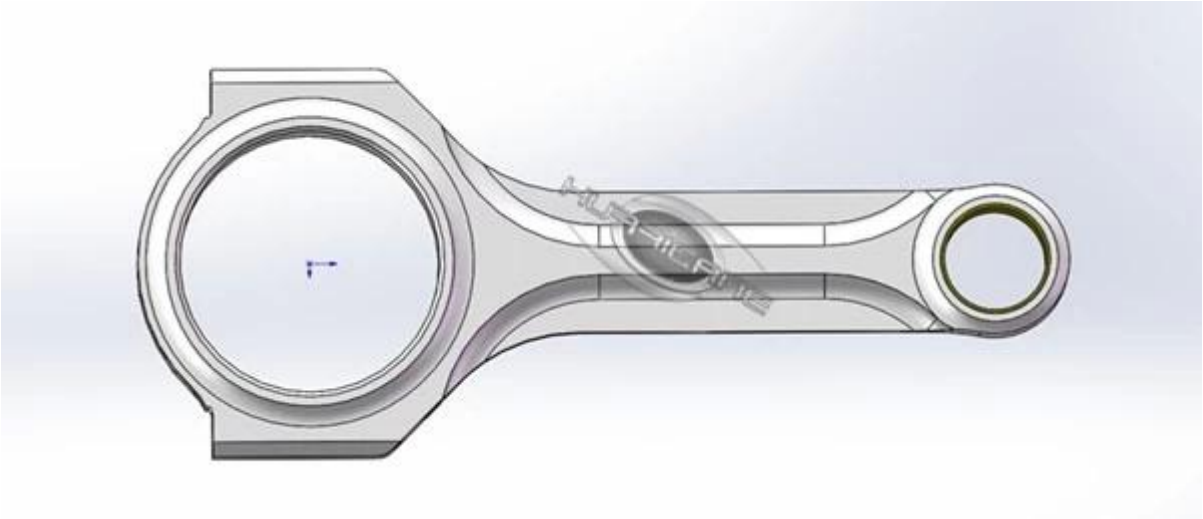

Hurricane make custom connecting rods too as long as sample or drawing provided , welcome to contact us if any further needs .