Forged I-Beam Connecting Rods Honda B16A 1.6L Main Sizes

Brand: Hurricane	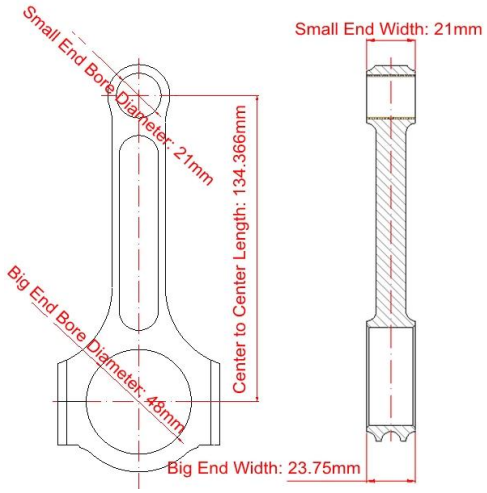
Center to Center Length: 134.366mm/5.290"	
Big End Bore Diameter: 48mm /1.890"	
Big End Width: 23.75mm/0.935"	
Small End Bore Diameter: 21mm/0.827"	
Small End Width: 21mm/0.827"	
Beam Style: I-beam	

Hurricanerods.com 4340 I-Beam connecting rods (B16A engines) Features

Connecting Rod Bolt Diameter	3/8"
Approximate Connecting Rod Weight	XXX
Advertised Horsepower Rating	800hp
Quantity	Sold as 4 pieces /set
Material	Forged 4340 steel
Connecting Rod Finish	Shot-peened, Polished
Pin	Bronze wrist pin bushings
Wrist Pin Style	Floating
Cap Retention Style	Cap screw
Weight Matched Set	Yes ,Balanced +/- 1g
Magnafluxed	Yes
Private Label	Yes ,available
Custom design	Yes, accept

Forged I Beam Connecting Rods Set Honda Civic Si Del Sol B16A Description

Hurricane Speed and Performance I-Beam Rods have been connecting rods of choice for engine builders of high horsepower race applications over 20 years. Their unique beam formation makes them extremely strong both in tension and compression, as well as optimal with oil windage.

Specifications:

4340 vacuum melt chrome moly forging;
Designed and finish honed with CNC machine;
Heat-treated to HRC: 34~38;
Full coverage shotpeened for improved fatigue life;
End-to-end balanced in sets within +/- 1 gram;
Each rod comes standard with ARP 2000 bolts rated at 220,000 psi tensile strength;
Aluminum-bronze wrist pin bushings

Package contents:

- 4x Connecting Rods

Application:

B16A (First Generation)
1989-1993 Honda Integra XSi
1989-1991 Honda CRX SiR (EF8)
1989-1991 Honda Civic SiR (EF9)

B16A (Second Generation)
1992–1993 Honda Integra "XSi" (DA6, DA8)
1992–1994 Honda Civic SiR/SiRII (EG6)

1992–1993 Honda Civic Ferio SiR (EG9)
1992–1995 Honda CR-X del Sol SiR (EG2)
1996–1998 Honda Civic SiR/SiRII (EK4)
1996–2000 Honda Civic Ferio SiR (EK4)

B16B (Type R)
1997–2000 Civic Type R

B16A1
CRX'1.6 DOHC VTEC (EE8) - European market (EDM)
Civic'1.6 DOHC VTEC (EE9) - European market (EDM)

B16A2
1992-2000 Honda Civic EDM VTi (EG6/EG9 & EK4)
1992-1997 Honda Civic del Sol EDM VTi (EG)
1996-1997 Honda Civic del Sol VTEC USDM (EG2)
1996-1998 Honda Civic AUDM & NZDM Vti-R (EK4)
1999-2000 Honda Civic AUDM Vti-R (EM1)
1999-2000 Honda Civic USDM Si (EM1)
1999-2000 Honda Civic SiR Philippines (EK4 sedan)
1999-2000 Honda Civic CDM SiR (EM1)

Note: There are many different engine buids for B seriese engines, please make sure the specifications are correct for you. If you are not sure if this is the correct rod for you, please contact us online or email (marketing@hurricane-rod.com.cn), this is our pleasure to help you put together the parts list for your engine!

And if you are planning on making from 600~800hp on your 4cyl, We suggest that you ask us about one of H-beam rod options. Related Product here:
1. **Honda B16 H beam 4340 steel connecting rods,136mm length,20mm pin**
2. **H-beam connecting rod for Honda B16A VTEC 1.6L ,134.37mm length**
3. **Hurricane H-Beam Rod Honda Civic Si B16 B16A B16A2**