Toyota 1ZZ I-beam Connecting Rods Main Sizes

Brand: Hurricane*	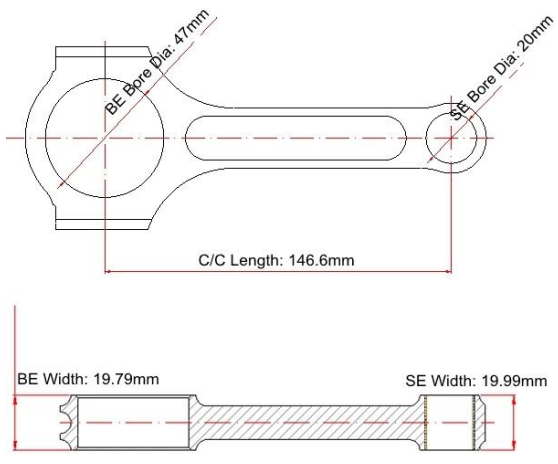
Center to Center Length: 146.6mm/5.772"	
Big End Bore Diameter: 47mm/1.850"	
Big End Width: 19.79mm/0.779"	
Small End Bore Diameter: 20mm /0.787"	
Small End Width: 19.99mm/0.787"	
Beam Style: I-beam	

Toyota 1ZZ I-beam Connecting Rods Features

Connecting Rod Bolt Diameter	3/8"
Approximate Connecting Rod Weight	XXX
Advertised Horsepower Rating	700hp
Quantity	Sold as 4 pieces /set
Material	Forged 4340 steel
Connecting Rod Finish	Shot-peened, Polished
Pin	Bronze wrist pin bushings
Wrist Pin Style	Floating
Cap Retention Style	Cap screw
Weight Matched Set	Yes ,Balanced +/- 1g
Magnafluxed	Yes
Private Label	Yes ,available
Custom design	Yes, accept

Products Description :

1).Toyota 1ZZ connecting rods designed and manufactured for high performance automotive race engines.

2). Engineered from high tensile **4340 (En24) steel** material .

3). Multi-stage heat treated processes .

4). Per rod 100% processed by CNC machine .

5). **I-Beam Style** for extra rigidity .

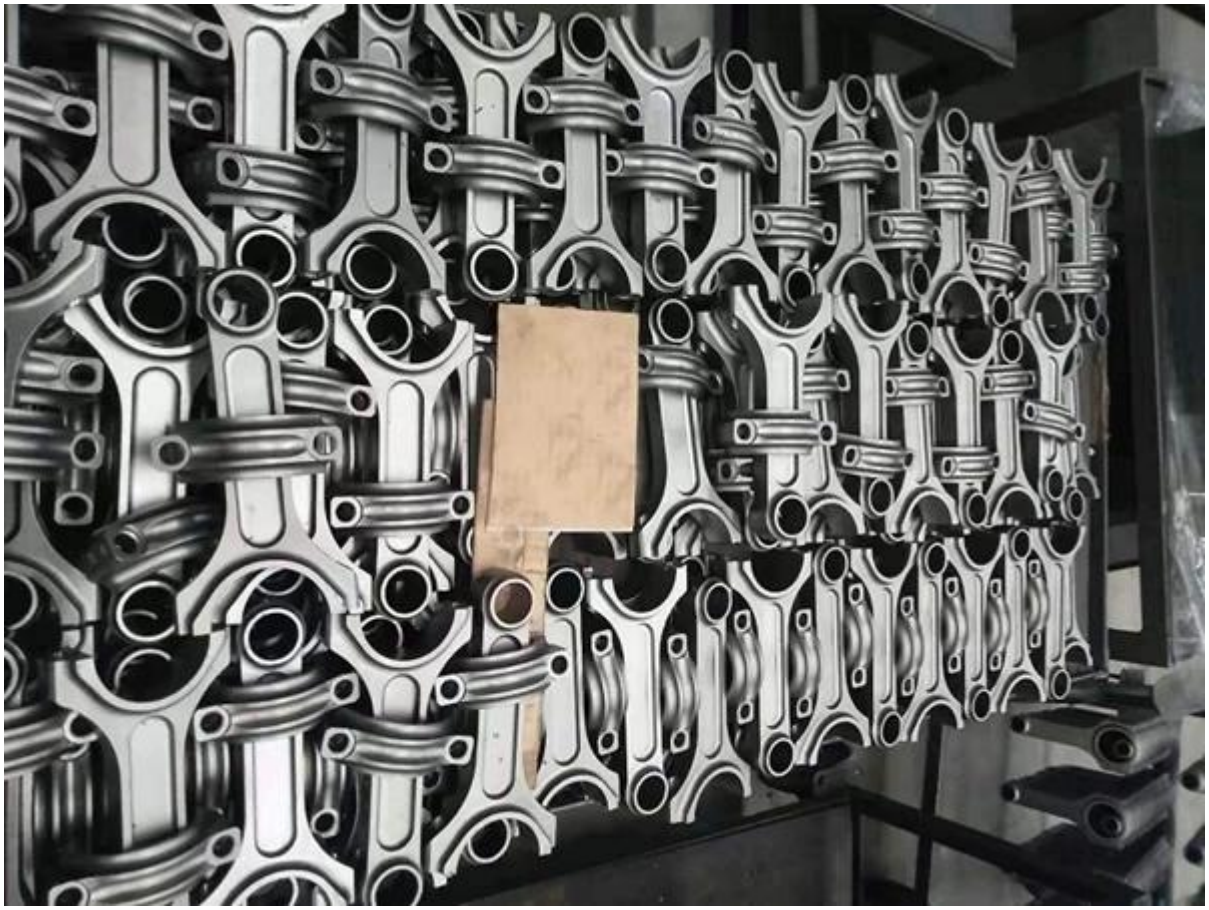

6). **Shot Peening** to relieve stress and improve fatigue life .

7). Weight matched and Packed in balanced sets +/- 1 gram.

8). All big and small ends are finished with SUNNEN honing machine .

9).Each rod includes Hurricane 3/8" cap fasteners that are rated at 210,000psi .

FAQ:

1). Q: What is the difference between a forged and billet steel connecting rod?
A: Both of them process with CNC machine. Only different on method when forming material.

2). Q: How can i choose design?
A: You can choose design basic on market habit, or customer needs, such as HP or which competition they join. Generally, H-beam: 550-750HP, I-beam and X-beam: beyond 700HP.

3). Q: Which package you use including transport?
A: Generally for retail, we use Hurricane box; for batch order, we use neutral package+metal trunk or wooden box.

For more FAQ , you can click **here** to view more or contact us directly .