Fiat Connecting Rods Main Sizes

Brand: Hurricane	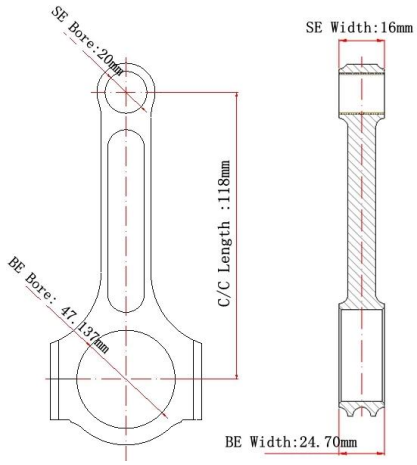
Center to Center Length: 118.00mm/4.646"	
Big End Bore Diameter: 47.137mm/1.854"	
Big End Width: 24.70mm/0.972"	
Small End Bore Diameter: 20.00mm /0.787"	
Small End Width: 16.00mm/0.630"	
Beam Style: I-beam	

Fiat Connecting Rods Features

Connecting Rod Bolt Diameter	3/8"
Approximate Connecting Rod Weight	xxx
Advertised Horsepower Rating	750hp
Quantity	Sold as 4 pieces /set
Material	Forged 4340 steel
Connecting Rod Finish	**Shot-peened**, Polished
Pin	Bronze wrist pin bushings
Wrist Pin Style	Floating
Cap Retention Style	Cap screw
Weight Matched Set	Yes ,Balanced +/- 1g
Magnafluxed	Yes
Private Label	Yes ,available
Custom design	Yes, accept

Fiat Connecting Rods Description

1. Made from forged 4340 Chrome Moly Steel material for the high durability
2. Designed and 100% processed by CNC machine
3. All big and small ends are finished with SUNNEN honing machine
4. High quality sleeves assembly in the rod cap to to avoid cap walking
5. Fully X-rayed, sonic tested and magnafluxed
6. Multi-stage heat treated for high strength
7. Shot peened to induce compressive surface stresses
8. Come with the bronzed bushing suitable for the floating piston pin

More Connecting rods for Fiat applications

1.129mm forged 4340 **I beam connecting rods** and **H-beam connecting rods** for Fiat Punto 1.4L T-Jet

2.144.98mm **H-beam connecting rod** for Fiat LANCIA 2.0L

3.128.5mm **H-beam connecting rod** for Fiat UNO/PUNTO 1.6 16V

Note: All above pictures shown are for illustration purpose only, actual product may vary, please feel free massage us online or send us a **email** if you have any question .