144X21 Forged Connecting Rods VW | Audi 2.0T EA888 Main Sizes

Brand: Hurricane	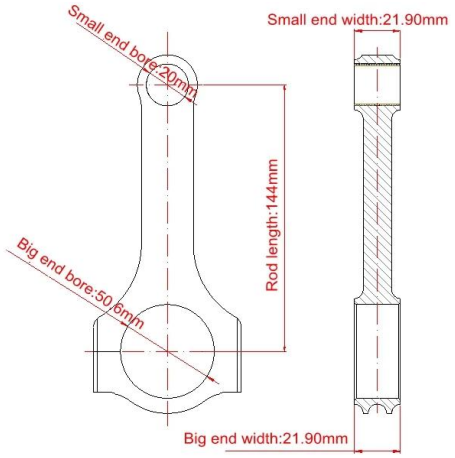
Center to Center Length: 144mm/5.670"	
Big End Bore Diameter: 50.6mm/1.992"	
Big End Width: 21.90mm/0.862"	
Small End Bore Diameter: 21.00mm /0.827"	
Small End Width: 21.90mm/0.862"	
Beam Style: H-beam with taper	

VW EA888 Gen 1 Engine H-beam Connecting Rods Features

Connecting Rod Bolt Diameter	3/8"
Approximate Connecting Rod Weight	XXX
Advertised Horsepower Rating	600hp
Quantity	Sold as 4 pieces /set
Material	Forged 4340 steel
Connecting Rod Finish	Shot-peened, Polished
Pin	Bronze wrist pin bushings
Wrist Pin Style	Floating
Cap Retention Style	Cap screw
Weight Matched Set	Yes ,Balanced +/- 1g
Magnafluxed	Yes
Private Label	Yes ,available
Custom design	Yes, accept

2.0L TSI EA888 Forged 4340 Steel Con-Rod Set by Hurricanerods.com Description

All Hurricane Speed and Performance EA888 connecting rods are constructed of premium 4340 forgings and are peened, heat treated and inspected for uniformity. Rod design and features are carefully designed and finalized in house through computational analysis and backed by a knowledge base backed through many years of application testing. All machined bores are inspected for proper fitment and clearances before they leave our facility.

ADDITIONAL FEATURES

TAPERED P.E
Tapered pin end feature allows weight saving and increased clearance when using boxed pistons.

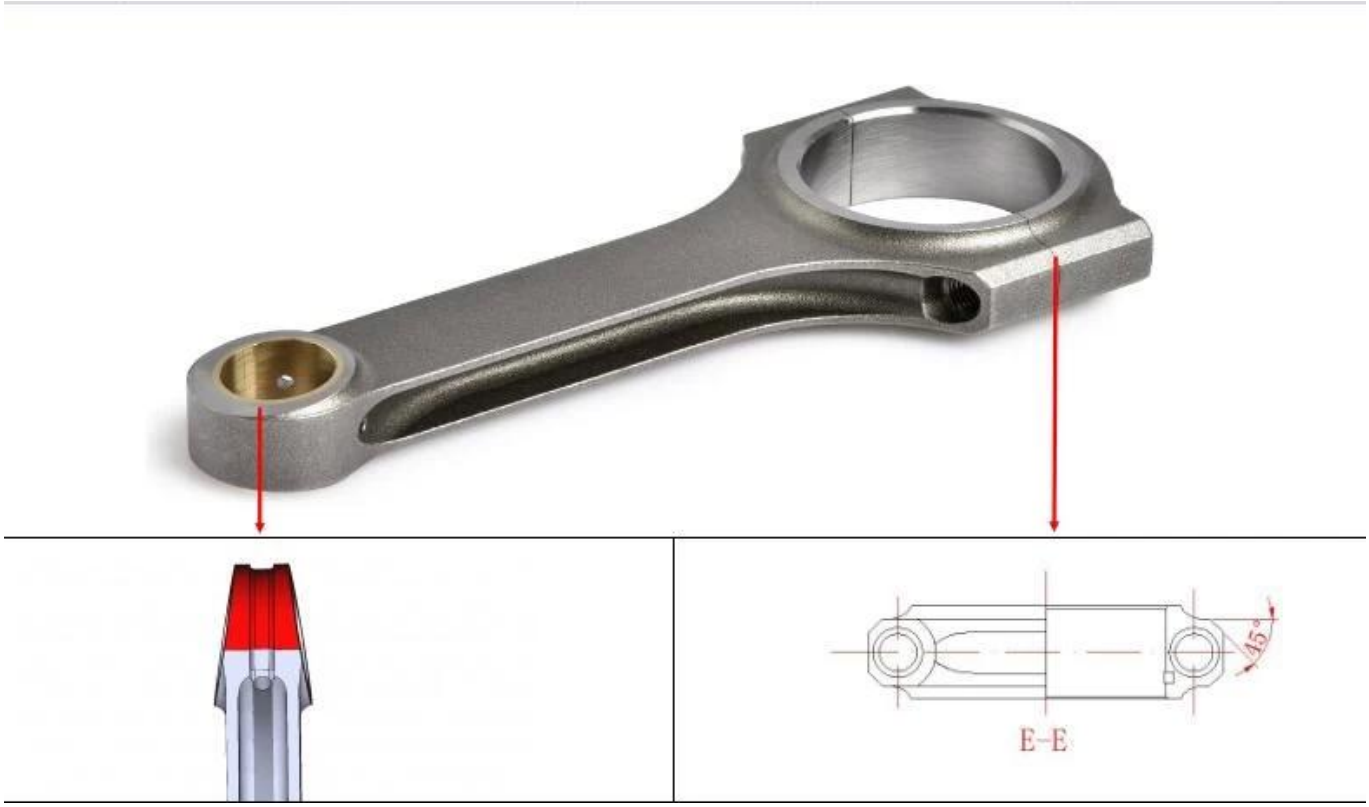

RIFLE DRILLED
This feature provides better pin oiling and cooling leading to increased longevity of the whole piston-rod set.

Any inquiry for these products , please feel free **contact** us .