Chrysler Mopar Small Block Connecting Rods Main Sizes

Brand: **Hurricane**	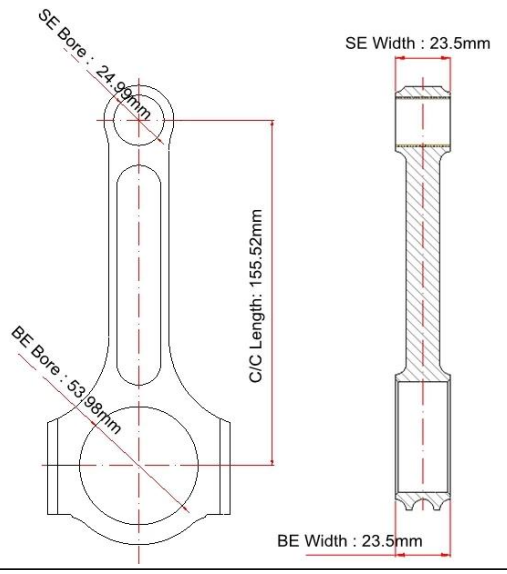
Center to Center Length: 155.52mm/6.123"	
Big End Bore Diameter: 53.98mm/2.125"	
Big End Width: 23.5mm/0.925"	
Small End Bore Diameter: 24.99mm /0.984"	
Small End Width: 23.5mm/0.984"	
Beam Style: I-beam	

Chrysler Mopar Small Block Connecting Rods Features

Connecting Rod Bolt Diameter	7/16"
Approximate Connecting Rod Weight	xxx
Advertised Horsepower Rating	1000hp
Quantity	Sold as 8 pieces /set
Material	Forged 4340 steel
Connecting Rod Finish	Shot-peened, Polished
Pin	Bronze wrist pin bushings
Wrist Pin Style	Floating
Cap Retention Style	Cap screw
Weight Matched Set	Yes ,Balanced +/- 1g
Magnafluxed	Yes
Private Label	Yes ,available
Custom design	Yes, accept

Chrysler Mopar Small Block Connecting Rods Description

Chrysler Mopar Small Block I-Beam shape connecting rods forged from high tensile 4340 forged steel and designed to be the most reliable in the racing industry, they are engineered for Chrysler Mopar Small Block engines reach up to 1000 HP .

They are heat treated to HRC 34-38 , then **polished and shot peened** to provide more fatigue strength. All these rods small ends are bushed for a fully floating pin and packed in balanced sets well +/- 1 gram, and are available with 7/16" ARP 2000 bolts .

The rods can be built to various beams to meet your different needs ,such as H-beam , I-beam , X-beam or A-beam and so on , you are welcome to click here to view more details of beam shape : **Hurricane Connecting Rod Features - Various Beam Designs** .

In addition , **Custom rods** can be made if detailed drawing or detailed specifications or sample provided .

Any further question , please feel free contact us on line or mail to **marketing@hurricane-rod.com.cn** .