Brand: Hurricane
Engine: Buick V6
Part Type: Connecting Rods
Center to Center Length: 142.24mm/5.600"
Big End Bore Diameter: 60.3mm/2.374"
Big End Width: 21.64mm/0.852"
Small End Bore Diameter: 23.012mm /0.906"
Small End Width: 22.1mm/0.870"
Beam Style: H-beam
Connecting Rod Bolt Diameter: 3/8"
Approximate Connecting Rod Weight: 700g/piece
Advertised Horsepower Rating: 900hp
Quantity: Sold as 6 pieces /set
Material: Forged 4340 steel
Connecting Rod Finish: Shot-peened, Polished
Pin: Bronze wrist pin bushings
Wrist Pin Style: Floating
Cap Retention Style: Cap screw
Weight Matched Set: Yes ,Balanced +/- 1g
Magnafluxed: Yes
Private Label: Yes, available
Custom design: Yes, accept

Buick 5.600" forged 4340 steel replacement conrods Main Drawing

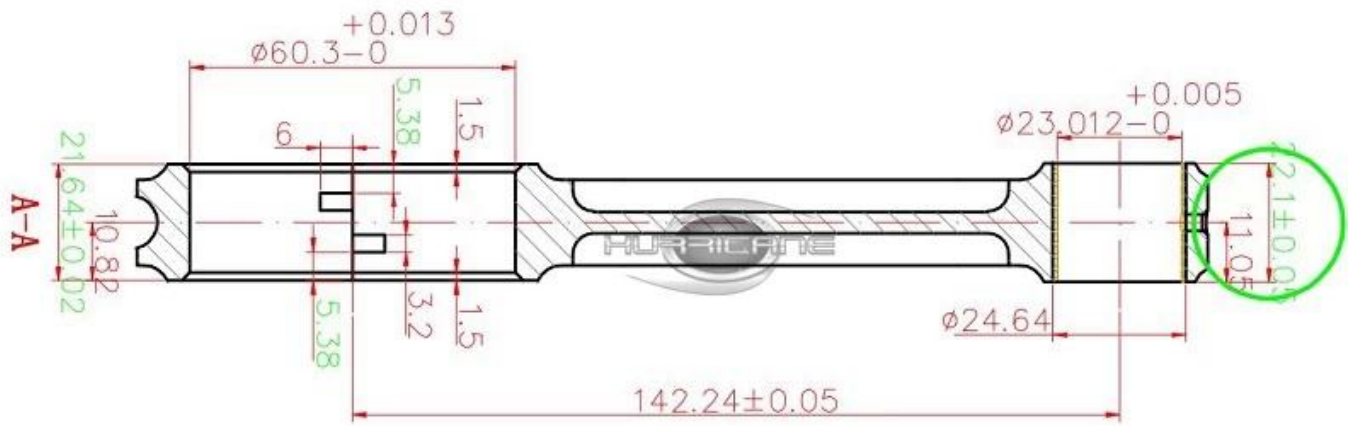

Buick Series II L67 V6 connecting rod Descripition

Buick V6 H-beam connecting rods are our best-seller list in a high strength H beam forged style. Hurricane is producing an extremely strong, 4340 forged rod sets at a reasonable price for the Buick V6 Turbo engines. H-Beam forged 4340 steel connecting rod for buick v6 designed utilizing the latest technology, They are shot-peened for improved fatigue life and feature bronze wrist pin bushings and ARP 2000 fasteners. this product by Hurricane Speed And Performance features premium quality and will perform better than advertised. Perfect for your vehicle and lifestyle, it is manufactured to meet or exceed stringent industry standards.
Alll hurricane factory buick performance connecting rods here, shop now!

Hurricane have H beam, X beam and I beam design for Buick Series II L67 V6 connecting rods.

X beam design: *Buick V6 5.600" X-beam Forged Connecting Rods*
I beam design: *Hurricane 5.600" Buick Turbo V6 I beam Forged Steel ConRods*

Any question, please feel free to leave your message to *hurricane_team* or *contact_one_of_hurricane_s killed_staff_for_help.*

Application:

1996–2005 Buick Park Avenue Ultra
1997–2004 Buick Regal GS / GSE / GSX (SLP)
1996–1999 Buick Riviera (optional 1996-97, std. 1998-99)
2004–2005 Chevrolet Impala SS
2004–2005 Chevrolet Monte Carlo SS Supercharged/Intimidator SS/Dale Jr. SS
1996–1999 Oldsmobile Eighty-Eight LSS (limited)
1996–2003 Pontiac Bonneville SSEi
1997–2003 Pontiac Grand Prix GTP / GTX (SLP)
1996–2004 Holden Commodore VS (series II), VT, VX, VY
1996-2004 Holden Caprice and Statesman VS (Series I, II & III), WH, WK
2001–2004 Holden Monaro (V2 VZ) CV6

Buick Regal GS - 3800 Series II - L67 Engine Picture

Note: Picture from Curbside Classics.