MINI Cooper S Rods Main Sizes

Brand: Hurricane*	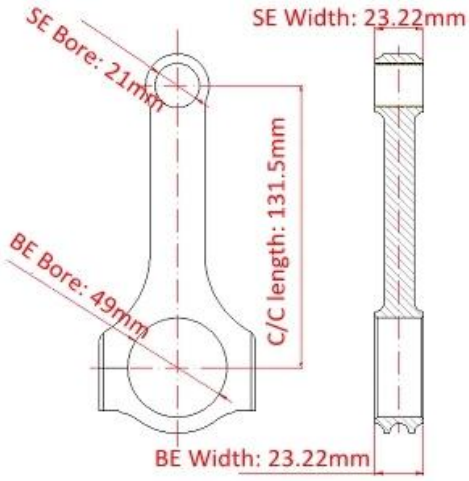
Center to Center Length: 131.5mm/5.177"	
Big End Bore Diameter: 49mm/1.929"	
Big End Width: 23.22mm/0.914"	
Small End Bore Diameter: 21mm /0.827"	
Small End Width: 23.22mm/0.914"	
Beam Style: H-beam	

MINI cooper S 131.5mm Connecting Rods Features

Connecting Rod Bolt Diameter	3/8"
Approximate Connecting Rod Weight	XXX
Advertised Horsepower Rating	600HP
Quantity	Sold as 4 pieces /set
Material	Forged 4340 steel
Connecting Rod Finish	Shot-peened, Polished
Pin	Bronze wrist pin bushings
Wrist Pin Style	Floating
Cap Retention Style	Cap screw
Weight Matched Set	Yes ,Balanced +/- 1g
Magnafluxed	Yes
Private Label	Yes ,available
Custom design	Yes, accept

BMW/Mini Cooper S Tritec Connecting Eods Description

Hurricane factory strives to bring customers quality guaranteed connecting rod at an affordable price. Premium 4340 steel is used to manufacture all of hurricane connecting rods. BMW/Mini Cooper S Tritec connecting rods Shot peenning finish provides for longer life and Bronze bushings allow for a full-floating pin. Those Mini Cooper S 131.5mm connecting rods are honed in-house and sizes are held to accepted tolerances in the industry. H-Beam Steel Connecting Rod for BMW Mini Tritec 131.5mm are designed for

high-stress racing applications and could reach 600 horsepower.

Note: MINI Cooper S Rods are weight-matched into sets and boxed

If you have any interests for our product, please feel free to *contact us.*

Mini cooper S Race Car

Note: Picture from Pinterest.