BMW M3/S14 Performance Connecting Rods Main Sizes

Brand: Hurricane	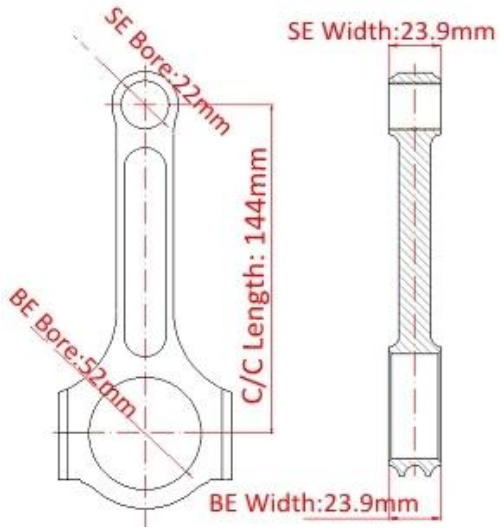
Center to Center Length: 144mm/5.670"	
Big End Bore Diameter: 52.00mm/2.047"	
Big End Width: 23.9mm/0.941"	
Small End Bore Diameter: 22mm /0.866"	
Small End Width: 23.9mm/0.941"	
Beam Style: I-beam	

BMW M3 S14 2.3L & 2.5L I-Beam Connecting Rods Features

Connecting Rod Bolt Diameter	3/8 "
Approximate Connecting Rod Weight	xxx gram
Advertised Horsepower Rating	800hp
Quantity	Sold as 4 pieces /set
Material	*Forged 4340 steel*
Connecting Rod Finish	Shot-peened, Polished
Pin	Bronze wrist pin bushings
Wrist Pin Style	Floating
Cap Retention Style	Cap screw
Weight Matched Set	Yes Balanced +/- 1g
Magnafluxed	Yes
Private Label	Yes ,available
Custom design	Yes, accept

Connecting Rods - BMW - M3/S14B23 S14/B25 Detailed Description

BMW M3/S14 performance connecting rods are produced from 4340 forgings and Magnaflux Inspected guarantees that the consistency of the forged material meets our high-quality standard. Connecting Rods - BMW - M3/S14B23 S14/B25 are fully CNC machined for great strength and Shot Peened for improved fatigue life. BMW M3 S14 2.3L & 2.5L I-Beam Connecting Rods could support 800 Horsepower engine.

Except I beam, Hurricane factory also offer H beam and X beam Connecting Rod for BMW E30 M3 S14 Engine 144mm Length

1. *H-Beam Connecting Rod for BMW E30 M3 S14 Engine 144mm Length 2.0 2.3L*
2. *Set of 4, BMW S14B23 E30 M3 4340 EN24 Forged Steel X-Beam Conrods*

Connecting Rods Kit 144mm for BMW M3 E30 - 2.3 2.5 S14B23 S14B25 Packing Details:

1. Clean
2. Optimal balancing for weight matched sets of ± 1gram
3. Put rods into rust-proof oil
4. Remove extra oil on rods
5. Packing with rust proof paper first
6. Put them into plastic bag and seal
7. Put every set into white box, and use paper card separate rods
8. Use Carton If shipping by Air-express, use Iron Box if shipping by Sea.

If you have any question about hurricane performance connecting rods, welcome to contact *hurricane team*. Your message are highly welcomed.

BMW S14 Engine

Note: Picture from Wikipedia.