Honda Integra LS CRV B18A B18B B20 Connecting Rods Main Sizes

Brand: Hurricane	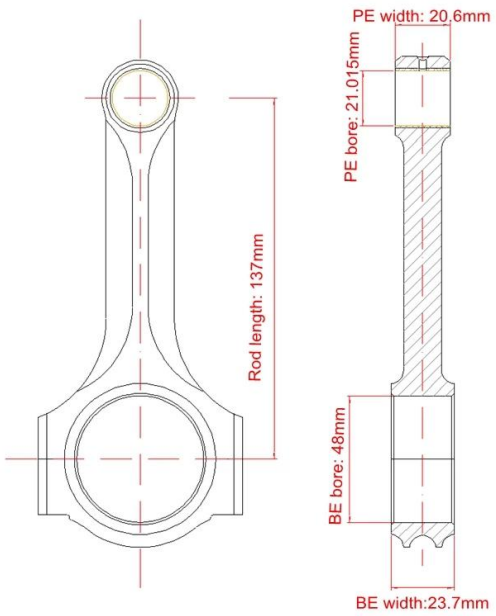
Center to Center Length: 137mm/5.394"	
Big End Bore Diameter: 48mm/1.890"	
Big End Width: 23.7mm/0.933"	
Small End Bore Diameter: 21.015mm/0.827"	
Small End Width: 20.6mm/0.811"	
Beam Style: X-beam	

Honda B18A / B18B Connecting Rods More Details

Connecting Rod Bolt Diameter	3/8"
Approximate Connecting Rod Weight	510g
Advertised Horsepower Rating	800hp
Quantity	Sold as 4 pieces /set
Material	Forged 4340 steel
Connecting Rod Finish	Shot-peened, Polished
Pin	Bronze wrist pin bushings
Wrist Pin Style	Floating
Cap Retention Style	Cap screw
Weight Matched Set	Yes ,Balanced +/- 1g
Magnafluxed	Yes
Private Label	Yes ,available
Custom design	Yes, accept

Honda B18A B18B Connecting Rods Description

The rods from Hurricane Speed&Performance is the premier industry connecting rod. Incorporating ARP's ultimate fastener, the Custom Age 625+, rated to 280,000 p.s.i., the B18B FORGED RODS delivers the

ultimate clamping ability at high horsepower and rpm. This rod is intended for the true hardcore enthusiast and racer and is rated in excess of 220HP per cylinder.

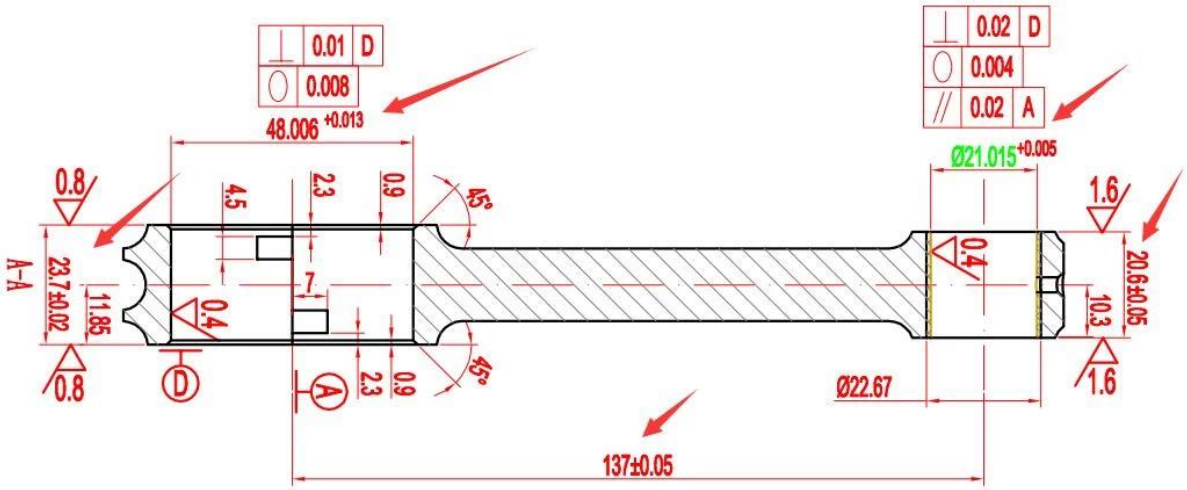

Honda B Series rod length included:

1. **Hurricane H-Beam Rod Honda Civic Si B16 B16A B16A2**

2. **Set of 4 Hurricane 4340 Chrome Moly Connecting Rods for HONDA/ACURA ACURA 1.8L LS/NON-VTEC,B18A/B**

3. **hurricane H-Beam Rods Honda B18**

4. **Honda Acura Integra GSR 1.8 VTEC B18C H-beam forged connecting rod , 5.433" rod length**

5. **Honda B16 H beam 4340 steel connecting rods,136mm length,20mm pin**

ARP2000 Bolt

Hurricane Speed&Performance is proud to feature ARP, the premier manufacturer of high quality fasteners, in every Hurricane connecting rod. ARP rod bolts are superior to those from other manufacturer's, especially in the area of fatigue strength. Testing has shown that ARP rod bolts
purchase separately for replacement purposes. ARP2000 – an exclusive, hybrid alloy developed to deliver superior strength and better fatigue properties, capable of achieving a clamp load of 220,000 psi. ARP Custom Age 625+ - Newly formulated super-alloy demonstrates superior fatigue life cycle, tensile strength and toughness, with complete resistance to atmospheric corrosion and oxidation. The Custom Age is ARP's ultimate fastener, capable of achieving a clamp load of 260,000 psi.

Considering different customers, there are two ways if you want to performance rods with ARP bolt:
1. We purchase and install on rods, MOQ:400PCS, 8~9USD/piece from America to our factory;
2. You purchase and ship to us, we will free install for you;

CONNECTING ROD BUSHINGS

Hurricane Speed&Performance connecting rod bushings are available for purchase as replacements to existing bushings that come installed in all new Hurricane connecting rods. Manufactured from Aluminum/Silicone/Bronze material. Main Chemistry:
Al (Aluminum):8.5-10.0
Mn (manganese):1.0-2.0
Fe (Iron):2.0-4.0
Cu (Bronze)